Lumi™ Satin Black

TABLE LAMP

E35501

Fact Sheet

PERFECT COLOUR MATCHING 95+ CRI

daylight
when light matters

Multi-use, bright and powerful, the Lumi has a large shade that can be adjusted vertically, horizontally and laterally to any desired position. Lumi is a professional workstation lamp that enables you to see fine details and true colours.

- LED 6,000°K daylight
- 4,000 Lux at 30cm (12")
- 2 brightness levels

LIGHT QUALITY ERGONOMICS DESIGN

daylightcompany.com

Lumi™ Satin Black

E35501

TABLE LAMP

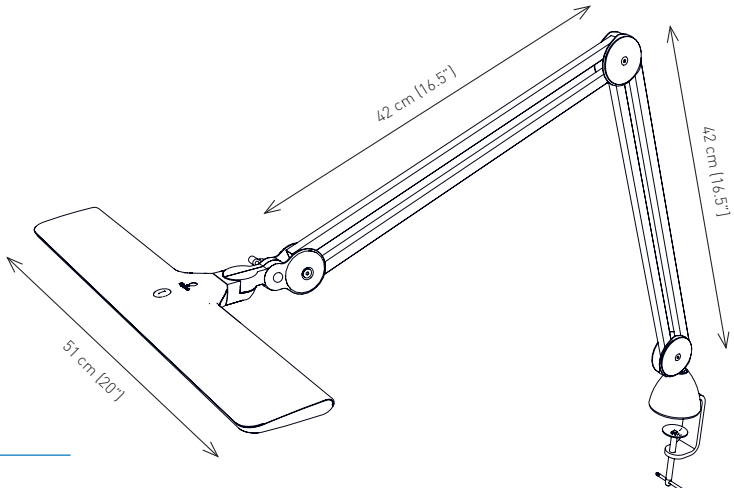

FEATURES

- Wide shade for an even spread of light over a large area
- 2 brightness levels
- Long reach 100cm
- Multi position head to direct the light where needed
- High quality daylight LEDs and 95+ CRI so you can see detail and colours accurately
- 2 years guarantee
- Satin black steel finish

SPECIFICATIONS

Product information

Weight	2kg
Colour	Black
Cable length	2.1m

Light output

Light source	LED
Lumens	1,320lm
Lux at 30cm (12")	4,000
Colour temperature	6,000K
CRI	95+
Energy consumption	15W

Packaging information

Height	36cm
Width	74.2cm
Depth	7.6cm
Packed weight	3kg
Products per master carton	4

+44 (0)20 8964 1200 | info@daylightcompany.com |

daylight
when light matters